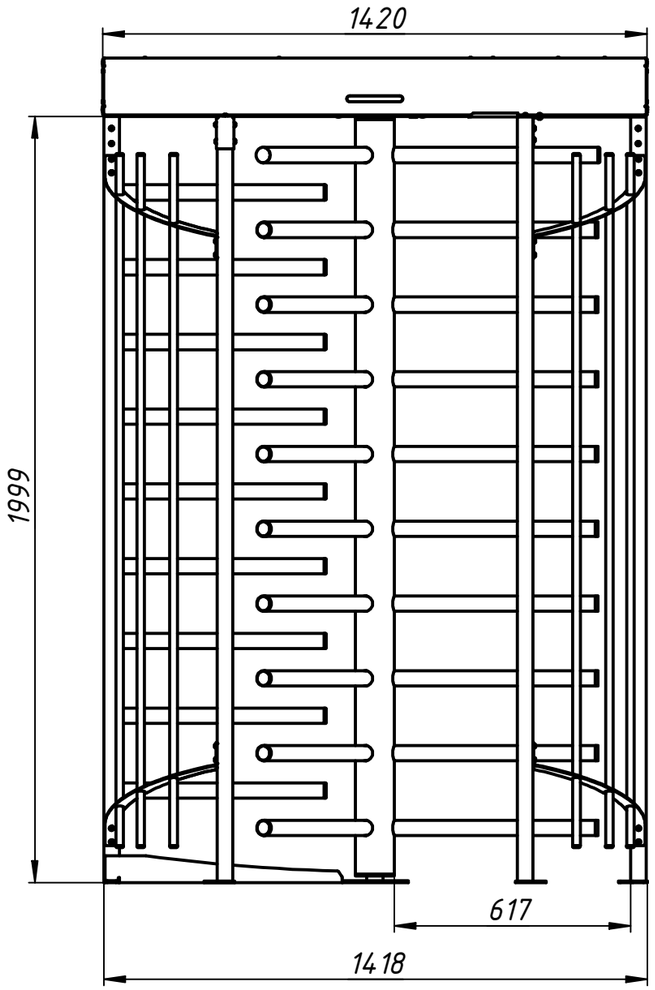

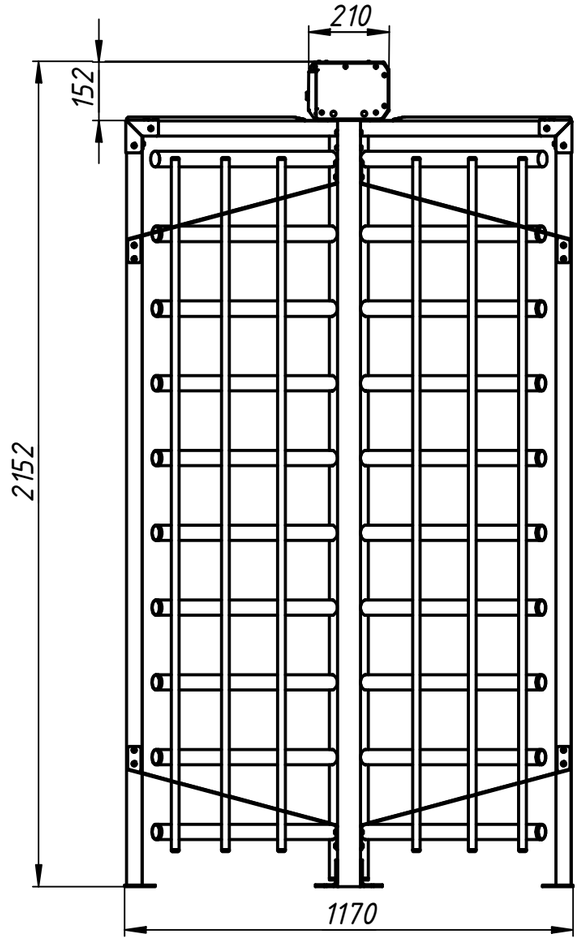

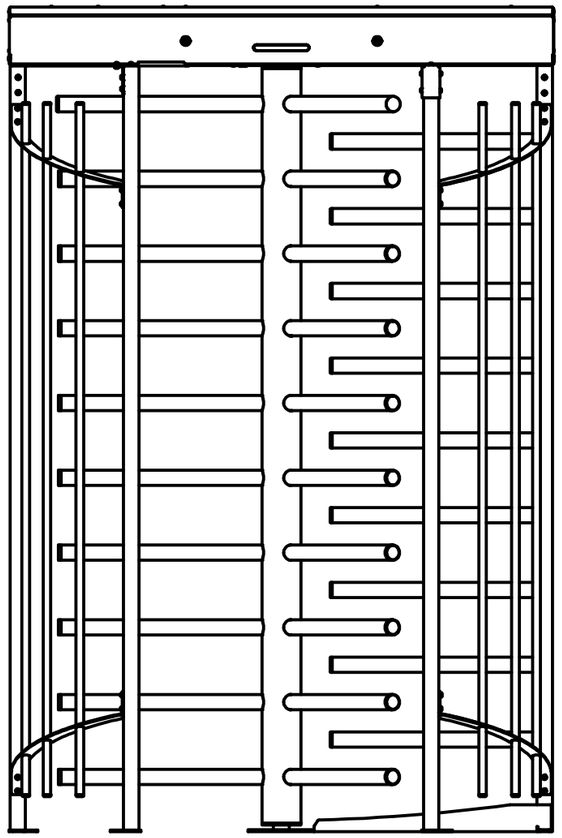

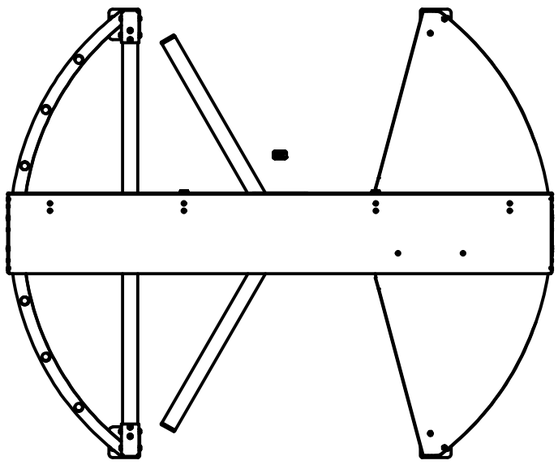

Installation template

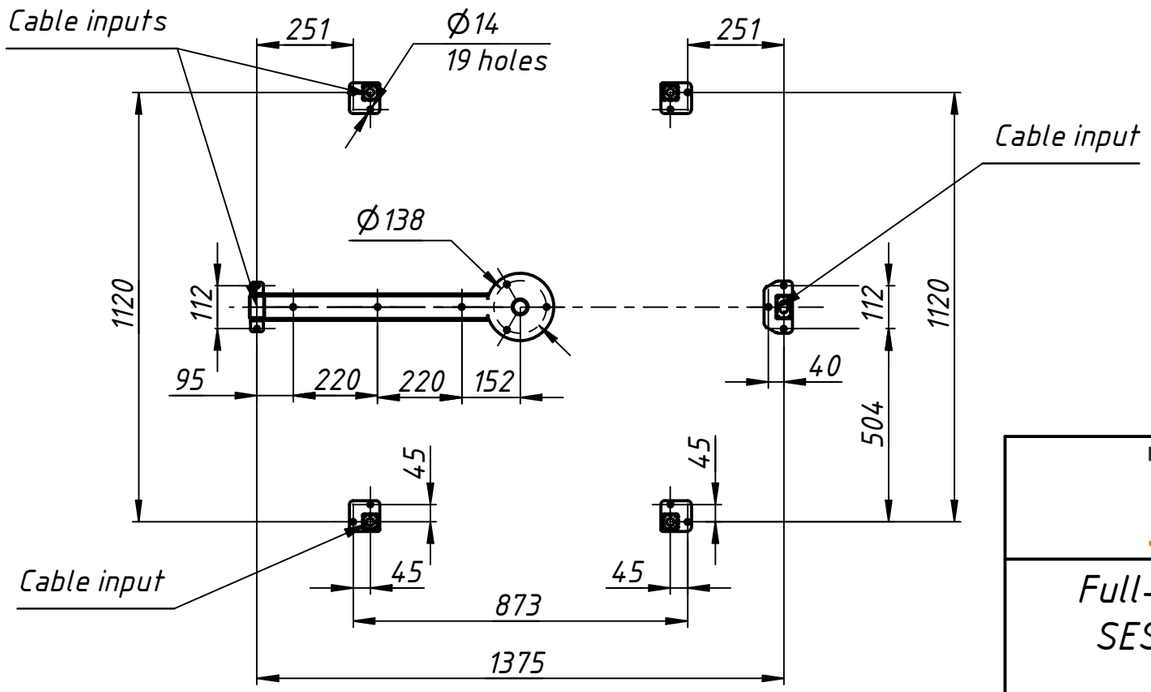

TISO

Full-height turnstiles
SESAME-S (Y-type)
www. tiso.global